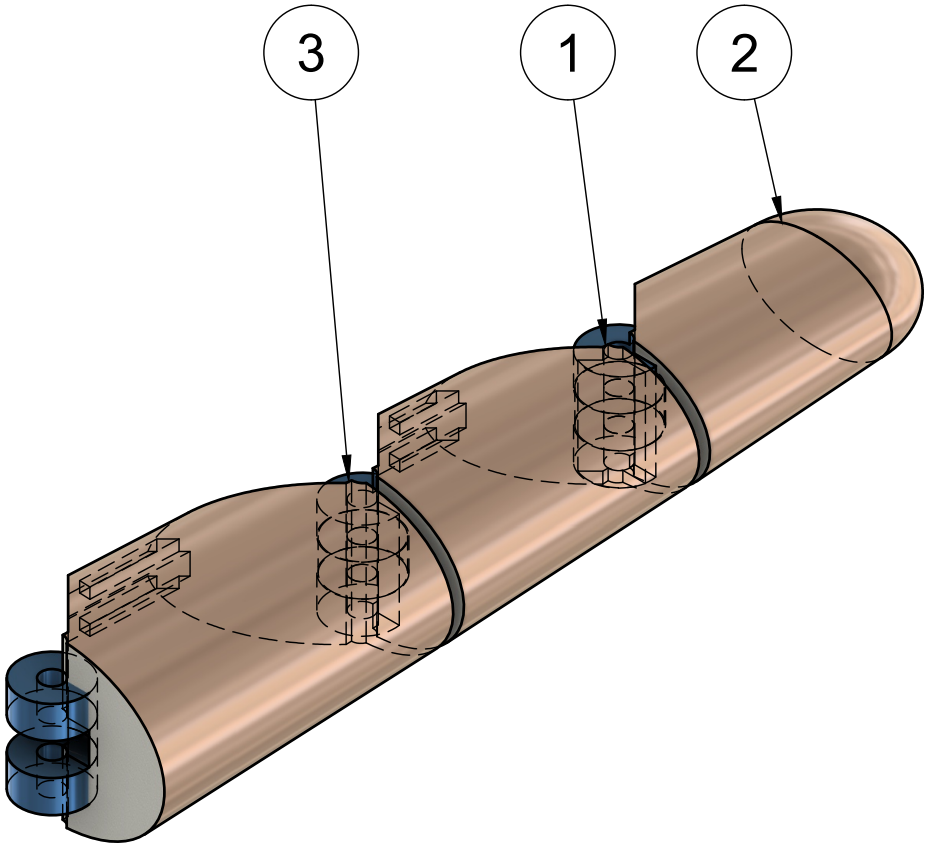


| Parts List | | | |
|---|---|---|---|
| Item | Qty | Part Number | Material |
| 1 | 1 | Index and ring finger part 2 v4 | ---- |
| 2 | 1 | Index and ring finger part 3 v2 | ---- |
| 3 | 1 | Index and ring finger part 1(incorrect) v6 | Steel |

| | | | |
|---|---|---|---|
| Dept. | Technical reference | Created by<br>Ariba Naaz 14-03-2026 | Approved by |
| | | Document type | Document status |
| | | Title<br>index finger assembly v3 | DWG No. |
| | | | Rev. / Date of issue / Sheet 1/8 |

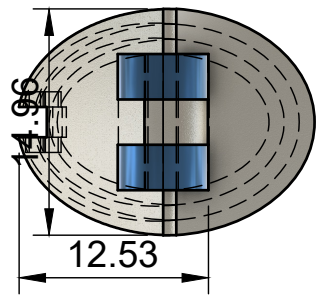


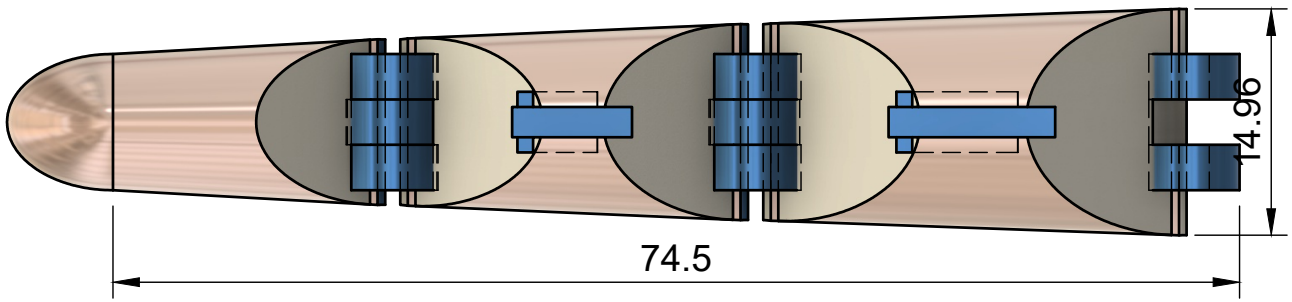


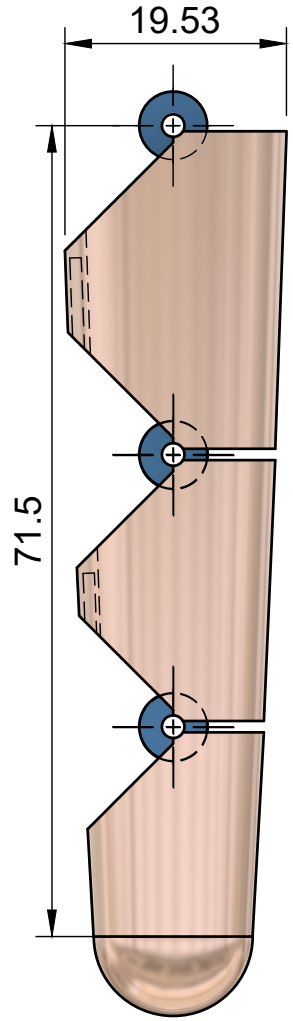


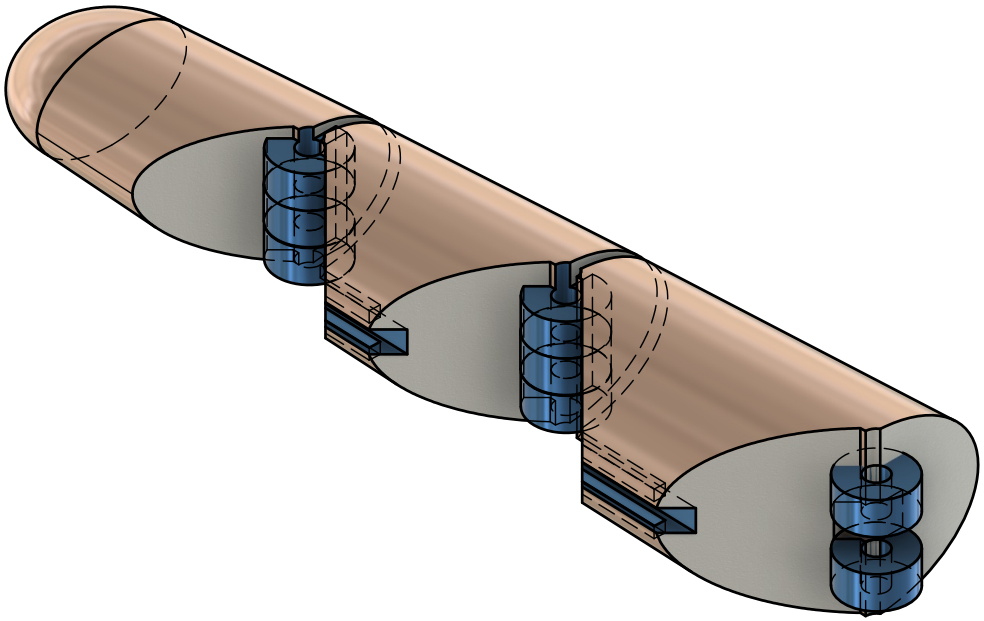

| Dept. | Technical reference | Created by<br>Ariba Naaz 14-03-2026 | Approved by | |
|---|---|---|---|---|
| | | Document type | Document status | |
| | | Title<br>index finger assembly v3 | DWG No. | |
| | | | Rev. / Date of issue | Sheet<br>2/8 |

| Parts List | | | |
|---|---|---|---|
| Item | Qty | Part Number | Material |
| 1 | 1 | Index part 1 | Steel |
| 2 | 1 | Uppr wheel | ---- |
| 3 | 1 | Lower wheel 1 | ---- |
| 4 | 1 | Lower wheel 2 | ---- |

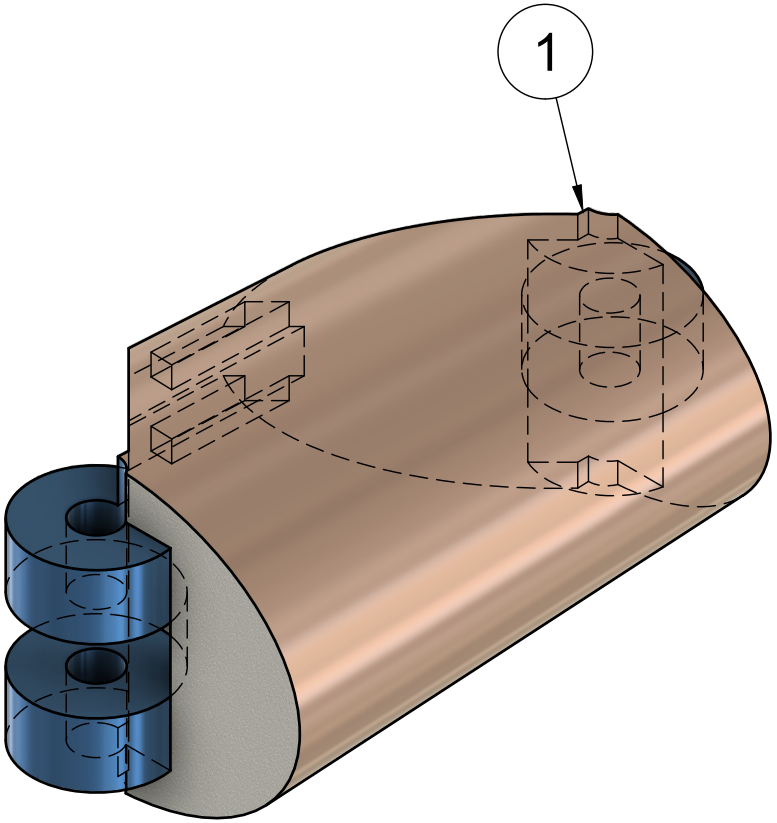


| Dept. | Technical reference | Created by<br>Ariba Naaz 14-03-2026 | Approved by | |
|---|---|---|---|---|
| | | Document type | Document status | |
| | | Title<br>index finger assembly v3 | DWG No. | |
| | | | Rev. / Date of issue | Sheet<br>3/8 |

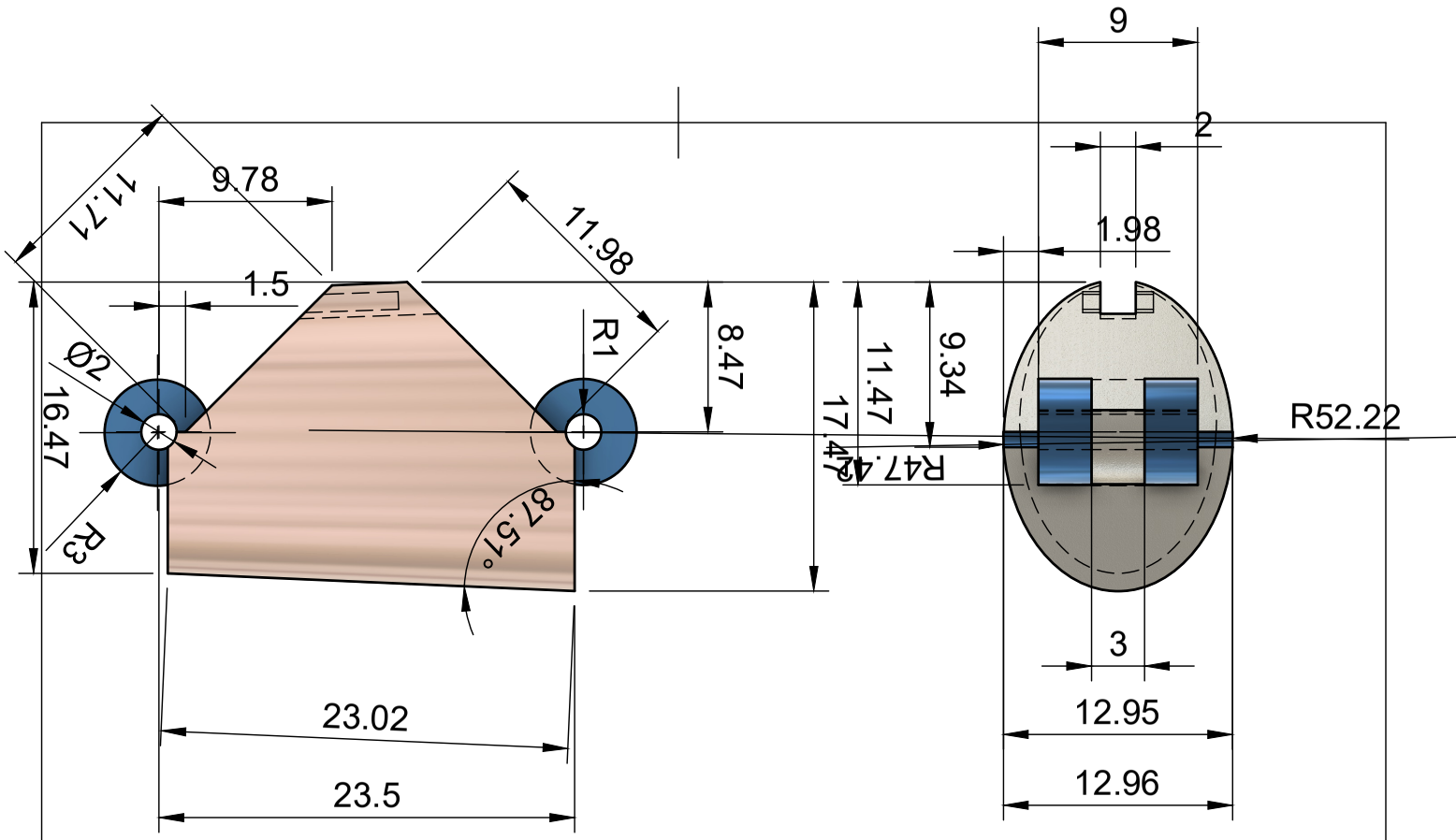
9
2
1.98
11.71
9.78
11.98
1.5
R1
8.47
11.47
9.34
17.47
R47.47
R52.22
Ø2
16.47
R3
87.51°
3
12.95
12.96
23.02
23.5

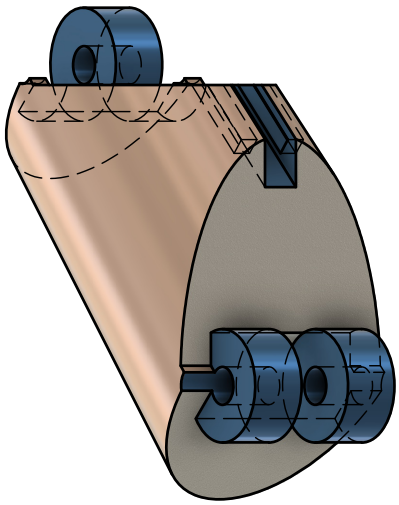

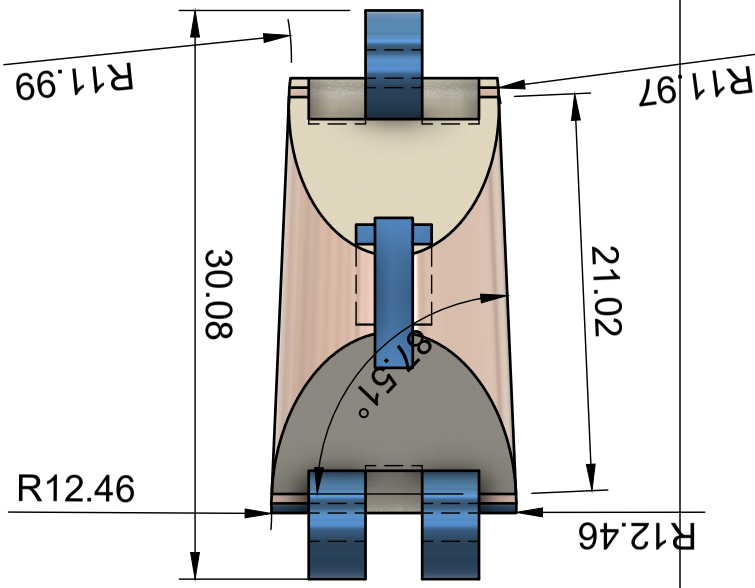
R11.99
R11.97
30.08
21.02
87.51°
R12.46
R12.46

| Parts List | | | |
|---|---|---|---|
| Item | Qty | Part Number | Material |
| 1 | 1 | Index part 1 (1) | Steel |
| 2 | 1 | Lower wheel 1 (1) | ---- |
| 3 | 1 | Lower wheel 2 (1) | ---- |

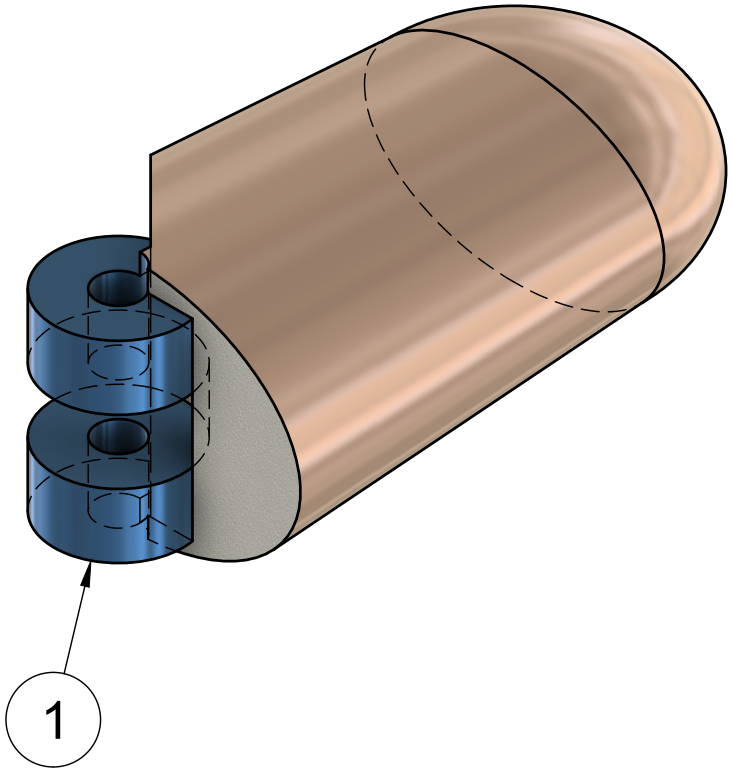


| | | | |
|---|---|---|---|
| Dept. | Technical reference | Created by<br>Ariba Naaz 14-03-2026 | Approved by |
| | | Document type | Document status |
| | | Title<br>index finger assembly v3 | DWG No. |
| | | | Rev. / Date of issue / Sheet 5/8 |

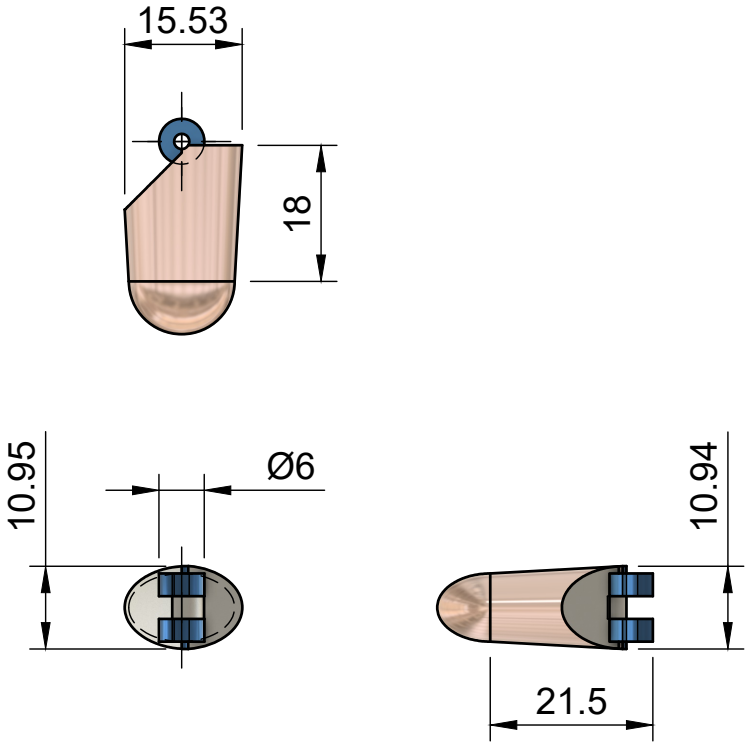


| Dept. | Technical reference | Created by<br>Ariba Naaz 14-03-2026 | Approved by | |
|---|---|---|---|---|
| | | Document type | Document status | |
| | | Title<br>index finger assembly v3 | DWG No. | |
| | | | Rev. / Date of issue | Sheet<br>6/8 |

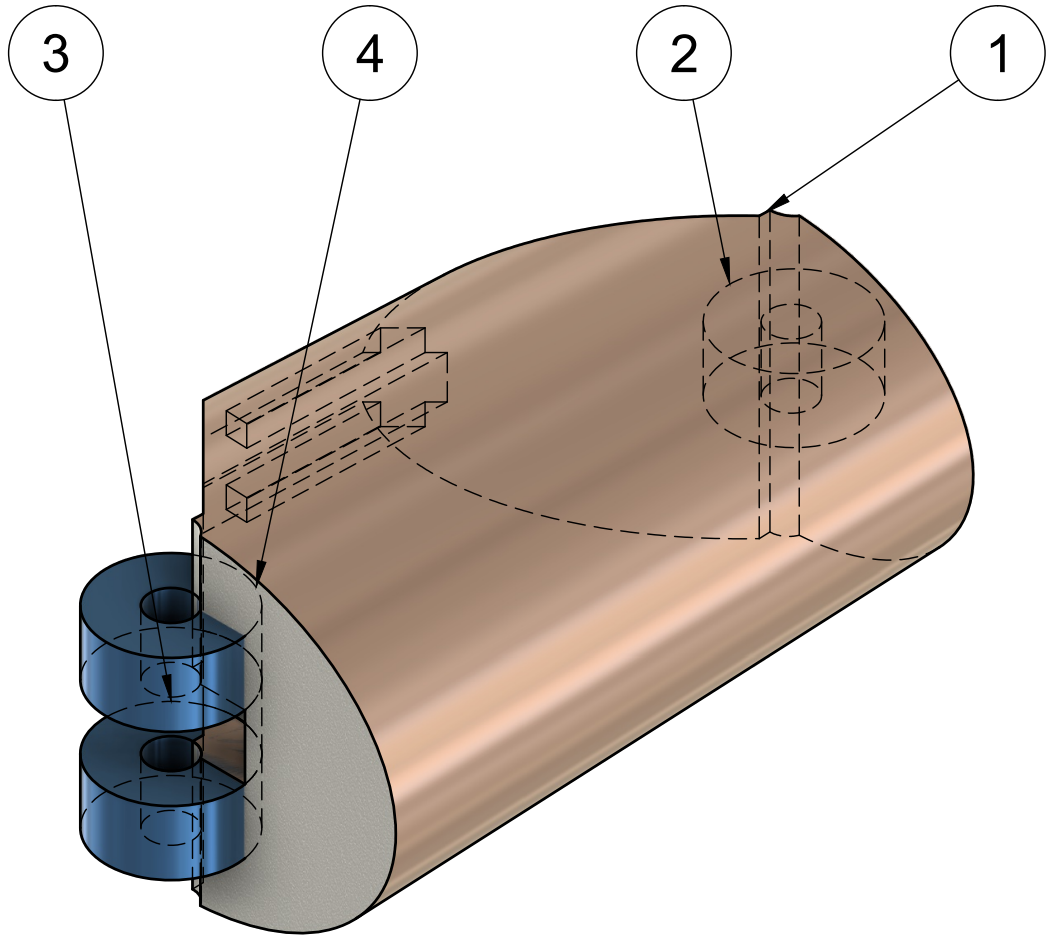


| Parts List | | | |
|---|---|---|---|
| Item | Qty | Part Number | Material |
| 1 | 1 | Index part 1 (2) | Steel |
| 2 | 1 | Uppr wheel (1) | Steel |
| 3 | 1 | Lower wheel 1 (2) | Steel |
| 4 | 1 | Lower wheel 2 (2) | Steel |

| | | | | |
|---|---|---|---|---|
| Dept. | Technical reference | Created by<br>Ariba Naaz 14-03-2026 | Approved by | |
| | | Document type | Document status | |
| | | Title<br>index finger assembly v3 | DWG No. | |
| | | | Rev. / Date of issue | Sheet<br>7/8 |

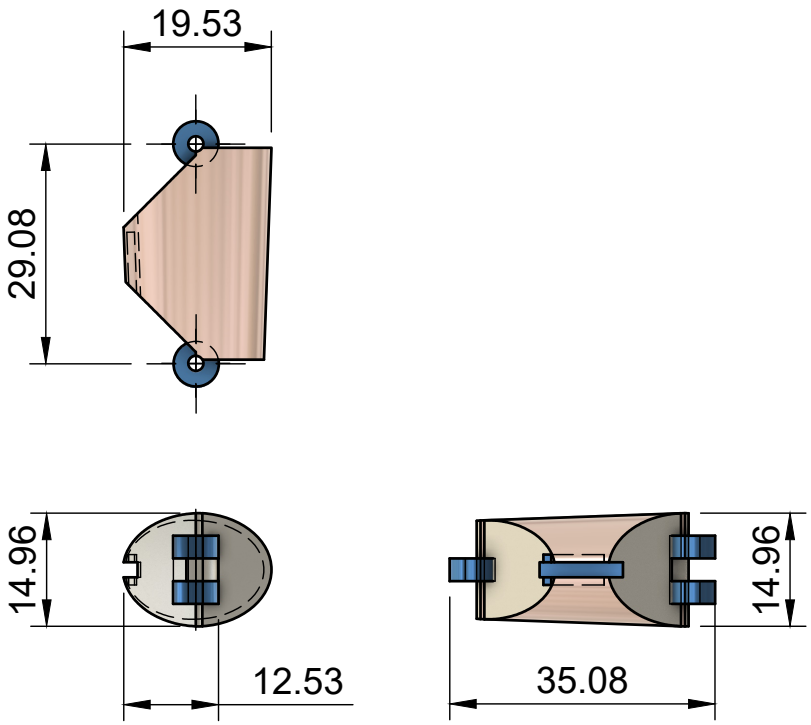


| | | | |
|---|---|---|---|
| Dept. | Technical reference | Created by<br>Ariba Naaz 14-03-2026 | Approved by |
| | | Document type | Document status |
| | | Title<br>index finger assembly v3 | DWG No. |
| | | | Rev. / Date of issue / Sheet 8/8 |